8B30/31

Voltage Input Modules, Narrow Bandwidth

Description

8B modules are an optimal solution for monitoring real-world process signals and providing high-level signals to a data acquisition system. Each 8B30 or 8B31 module isolates, filters, and amplifies a voltage input signal and provides an analog voltage output.

Signal filtering is accomplished with a 5-pole filter optimized for time and frequency response which provides 70dB of normal-mode rejection at 60Hz. One pole of this filter is on the field side of the isolation barrier for anti-aliasing, and the other four are on the system side.

A special input circuit on the 8B30 and 8B31 modules provides protection against accidental connection of power-line voltages up to 240VAC. Clamp circuits on the I/O and power terminals protect against harmful transients.

Isolation is provided by optical coupling to suppress transmission of common mode spikes or surges. The module is powered from +5VDC, ±5%.

The modules are designed for installation in Class I, Division 2 hazardous locations and have a high level of immunity to environmental noise.

▶ Features

- Accepts Millivolt and Voltage Level Signals
- High-Level Voltage Outputs
- 1500Vrms Isolation
- ANSI/IEEE C37.90.1 Transient Protection
- Input Protection to 240VAC Continuous
- 120dB CMR
- 70dB NMR at 60Hz
- ±0.05% Accuracy
- ±0.02% Linearity
- Low Drift with Ambient Temperature
- CE Compliant
- UL Listing Pending
- Mix and Match Module Types on Backpanel

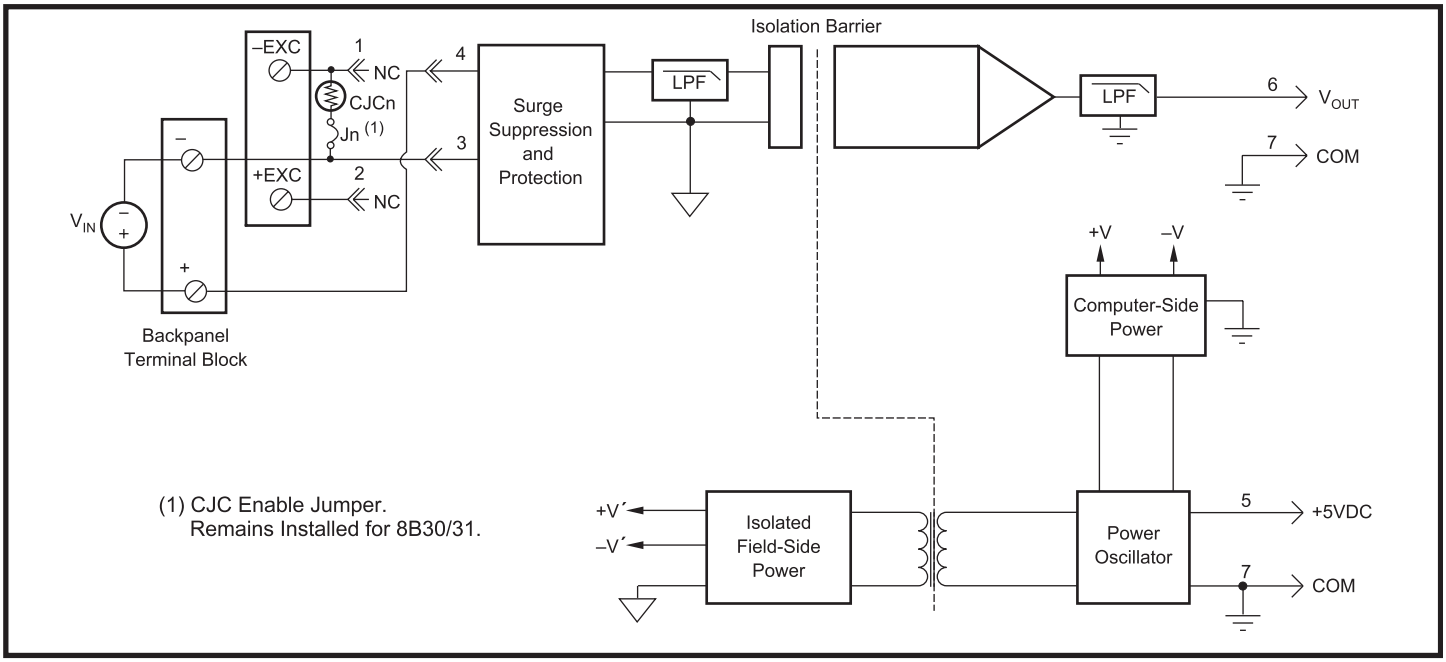

Figure 1: 8B30/31 Block Diagram

Isolated Analog Signal Conditioners

Specifications

Typical at T_A=+25°C and +5V power

Module	8B30	8B31
Input Range	±10mV to ±100mV	±1V to ±60V
Input Bias Current	±0.5nA	±0.05nA
Input Resistance		
Normal	50MΩ	500kΩ (minimum)
Power Off	100kΩ	500kΩ (minimum)
Overload	100kΩ	500kΩ (minimum)
Input Protection		
Continuous(1)	240VAC	240VAC
Transient	ANSI/IEEE C37.90.1	*
CMV, Input to Output	1500Vrms max	*
Transient, Input to Output	ANSI/IEEE C37.90.1	*
CMR (50Hz or 60Hz)	120dB	*
NMR	85dB at 60Hz	*
Accuracy(2)	±0.05% Span	*
Linearity	±0.02% Span	*
Stability		
Offset	±10ppm/°C	*
Gain	±50ppm/°C	±75ppm/°C
Noise		
Output, 100kHz	250µVrms	*
Bandwidth, –3dB	3Hz	*
Response Time, 90% Span	160ms	*
Output Range	See Ordering Information	*
Output Protection	Continuous Short to Ground	*
Transient	ANSI/IEEE C37.90.1	*
Power Supply Voltage	+5VDC ±5%	*
Power Supply Current	25mA	*
Power Supply Sensitivity	±25ppm/%	*
Mechanical Dimensions (h)(w)(d)	1.11" x 1.65" x 0.40" (28.1mm x 41.9mm x 10.2mm)	*
Environmental		
Operating Temp. Range	–40°C to +85°C	*
Storage Temp. Range	–40°C to +85°C	*
Relative Humidity	0 to 95% Noncondensing	*
Emissions EN61000-6-4	ISM, Group 1	*
Radiated, Conducted	Class A	*
Immunity EN61000-6-2	ISM, Group 1	*
RF	Performance A ±0.5% Span Error	*
ESD,EFT	Performance B	*

NOTES:
* Same specification as 8B30.
(1) 240VAC between +Input terminal and –Input, +EXC, or –EXC terminals.
120VAC between –Input and +EXC or –EXC terminals.
120VAC between +EXC and –EXC terminals.
(2) Includes linearity, hysteresis and repeatability.

Ordering Information

Model	Input Range	Output Range
8B30-01	–10mV to +10mV	–5V to +5V
8B30-02	–50mV to +50mV	–5V to +5V
8B30-03	–100mV to +100mV	–5V to +5V
8B31-01	–1V to +1V	–5V to +5V
8B31-02	–5V to +5V	–5V to +5V
8B31-03	–10V to +10V	–5V to +5V
8B31-04	–1V to +1V	0V to +5V
8B31-05	–5V to +5V	0V to +5V
8B31-06	–10V to +10V	0V to +5V
8B31-07	–20V to +20V	–5V to +5V
8B31-08	–20V to +20V	0V to +5V
8B31-09	–40V to +40V	–5V to +5V
8B31-10	–40V to +40V	0V to +5V
8B31-12	–60V to +60V	–5V to +5V
8B31-13	–60V to +60V	0V to +5V